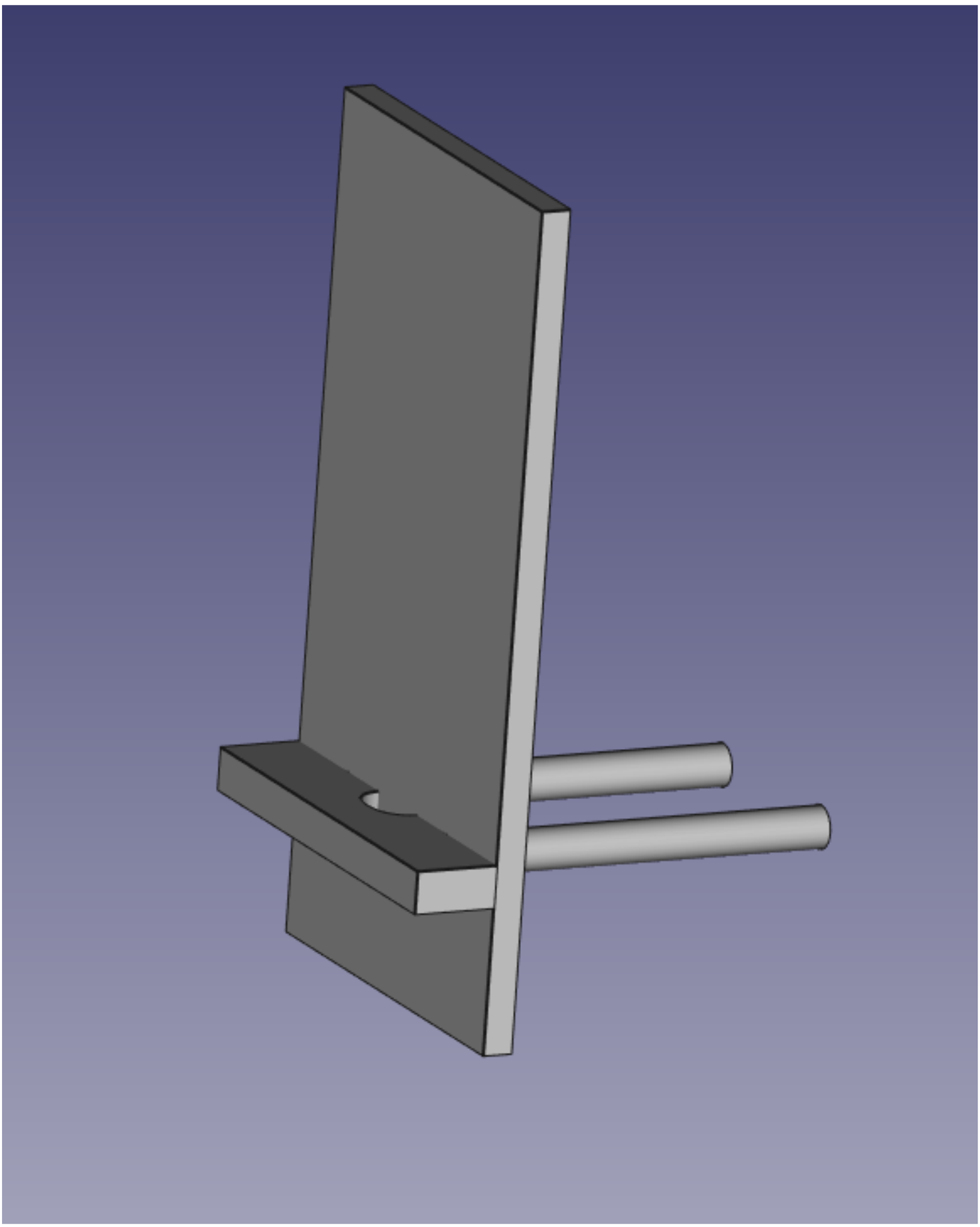

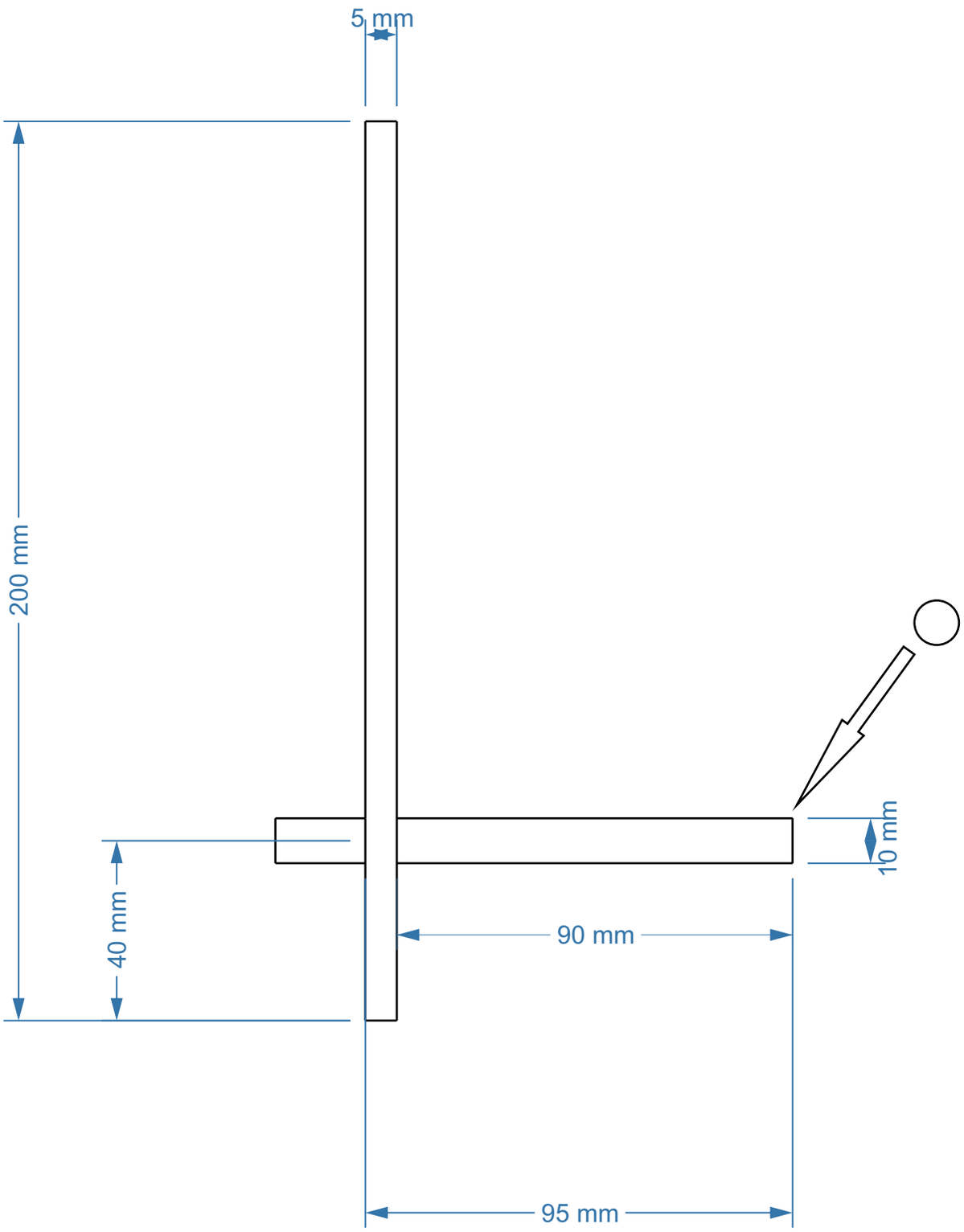
5 mm
200 mm
40 mm
90 mm
95 mm
10 mm

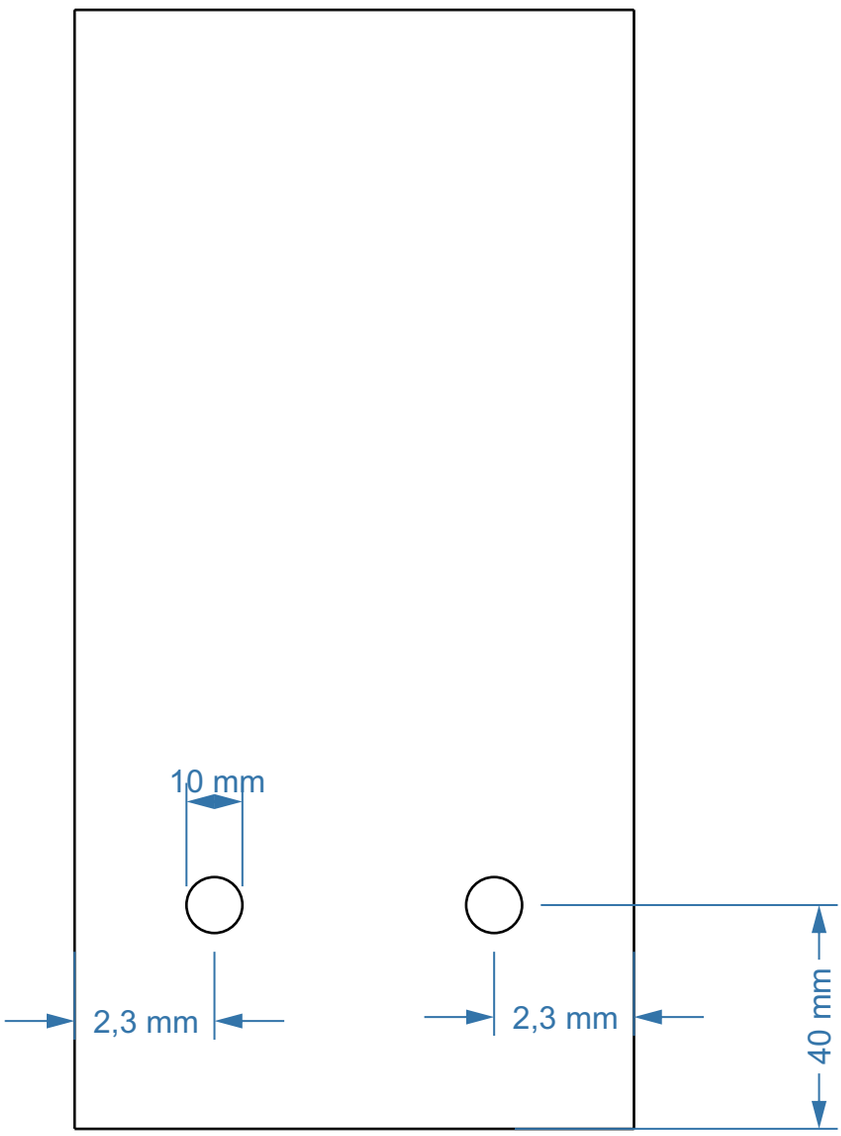
10 mm
2,3 mm
2,3 mm
40 mm

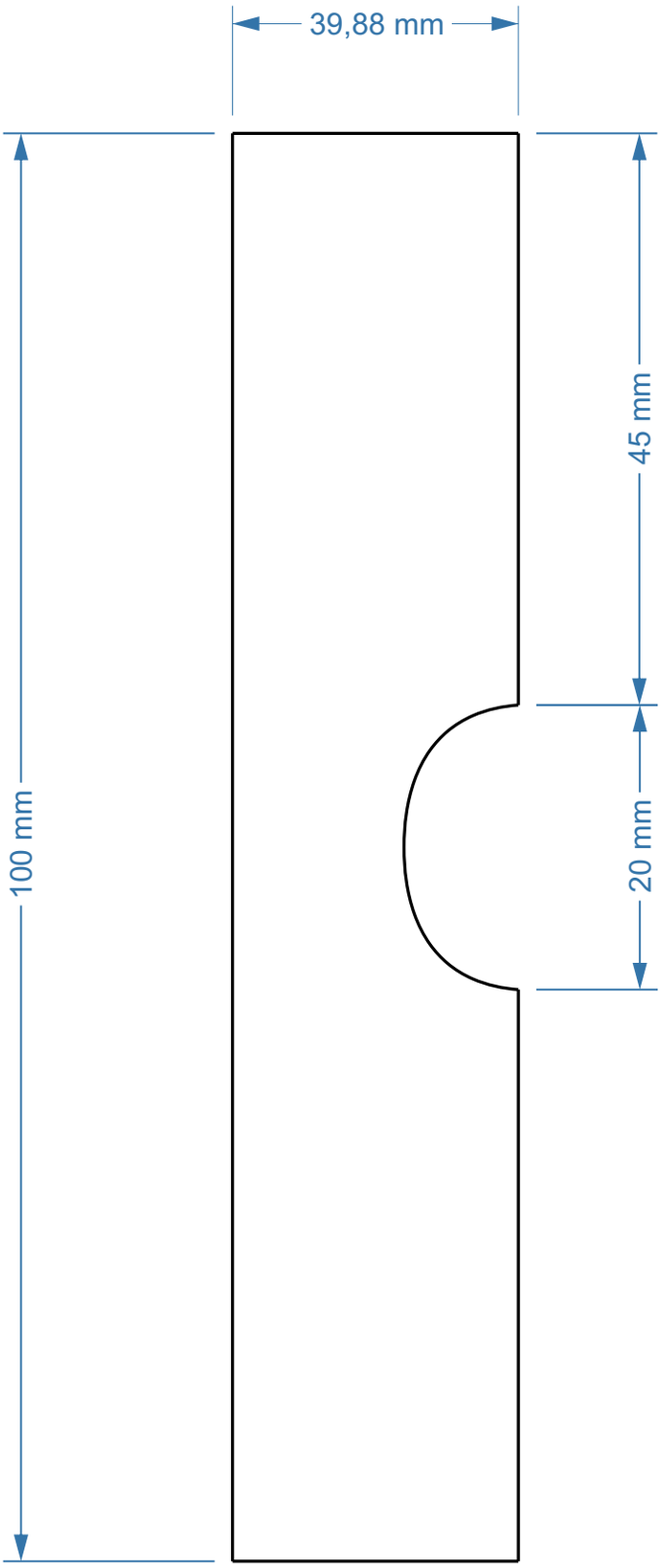
39,88 mm
100 mm
45 mm
20 mm

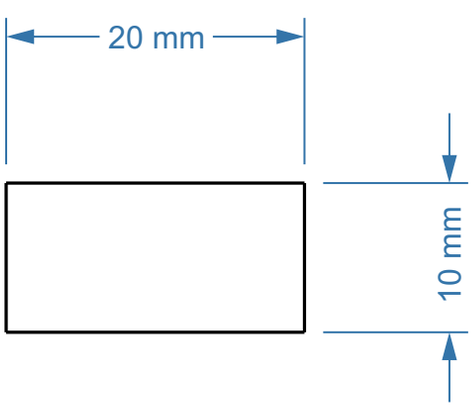
20 mm
10 mm